AURO PUMPS PVT.LTD.

Estb. 1984 in Technology Transfer from Pompe Vergani SpA of Italy

ACTF

AIR - COOLED THERMIC FLUID PUMPS

ACCTF

WATER - COOLED THERMIC FLUID PUMPS

ACTF – AIR COOLED THERMIC FLUID PUMPS

Heat transfer is a critical part of any industrial process and ACTF pumps are developed specifically for thermic fluid and hot water applications. ACTF pumps are air-cooled pumps with an in-built heat barrier that keeps away the damaging heat of the hot oil from the mechanical seal and bearings. The self-cooling design eliminates the need for expensive water cooling to the pump and reduces operational costs. The mechanical seal does not require external cooling and uses the pumped liquid for lubrication.

Apart from the standard construction with a single acting mechanical seal, ACTF pumps are also available with a standard double acting mechanical seal or a single or double acting metal bellow seal depending on the temperature of the hot oil. A vertical installation variant of the ACTF pump is also available for applications where installation space is a constraint. With an inline suction and discharge nozzle orientation minimal floor space is required to install these pumps.

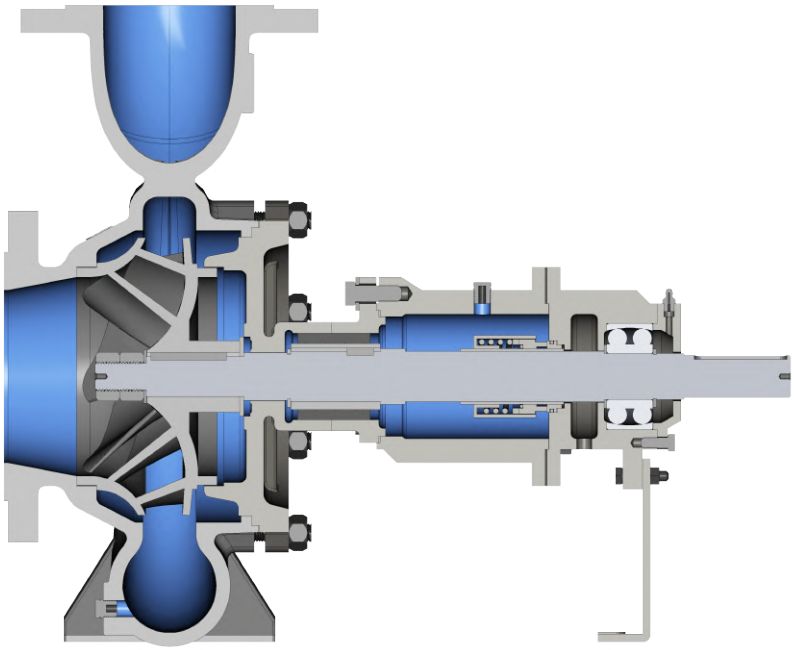

APPLICATIONS

THERMIC FLUID BOILERS	USED OIL RECYCLING PLANT	EDIBLE OILS AND FOOD PROCESSING
CONCENTRATED SOLAR POWER PLANTS	THERMAL STORAGE HEAT TRANSFER	HIGH PRESSURE HOT WATER

TECHNICAL DETAILS

CAPACITY	*upto 350 m^3/hour*
HEAD	*upto 90 m*
PRESSURE	*upto 16 bar*
SIZE	*25 to 100 mm*
TEMPERATURE RANGE	*upto 350°C for thermic fluids and 170°C for hot water*
OPERATING FREQUENCY	*50Hz and 60Hz*
MATERIAL OF CONSTRUCTION	*WCB, CF8, CF8M*
BACK PULL-OUT DESIGN FOR EASY MAINTENANCE AND OPERATION	

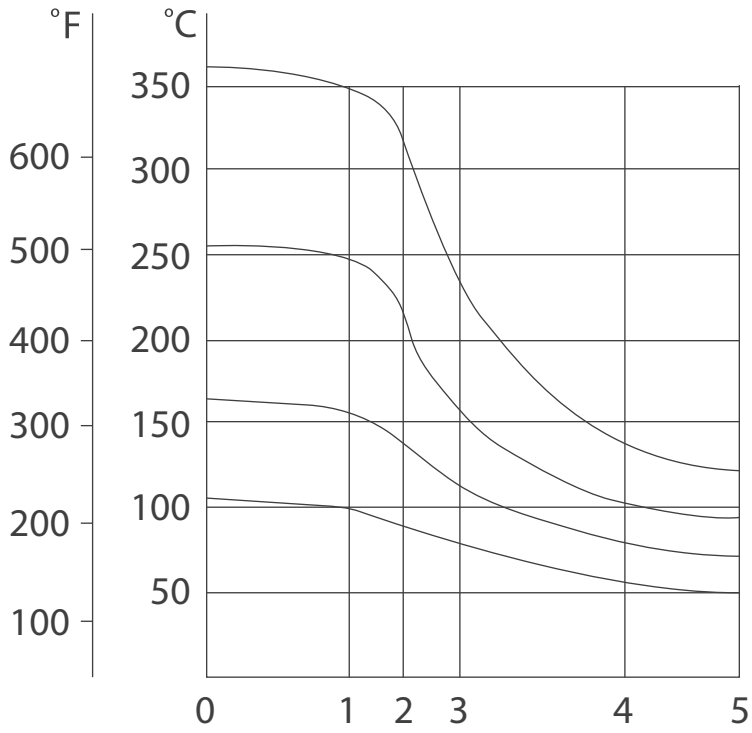

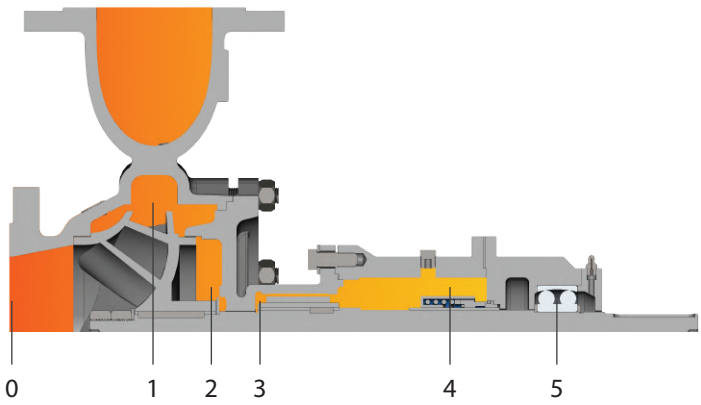

ACTF CROSS SECTION

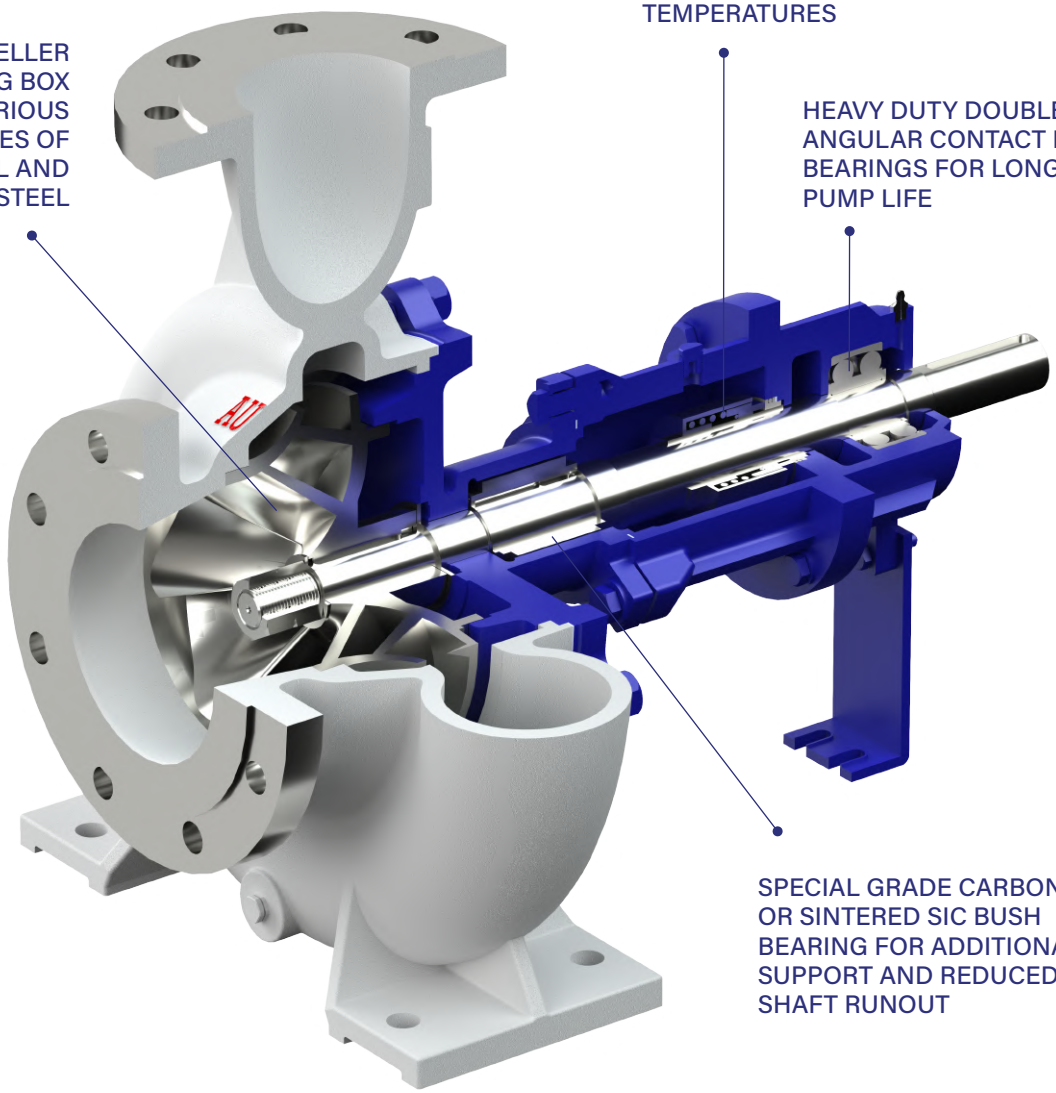

ACTF FAMILY CURVES

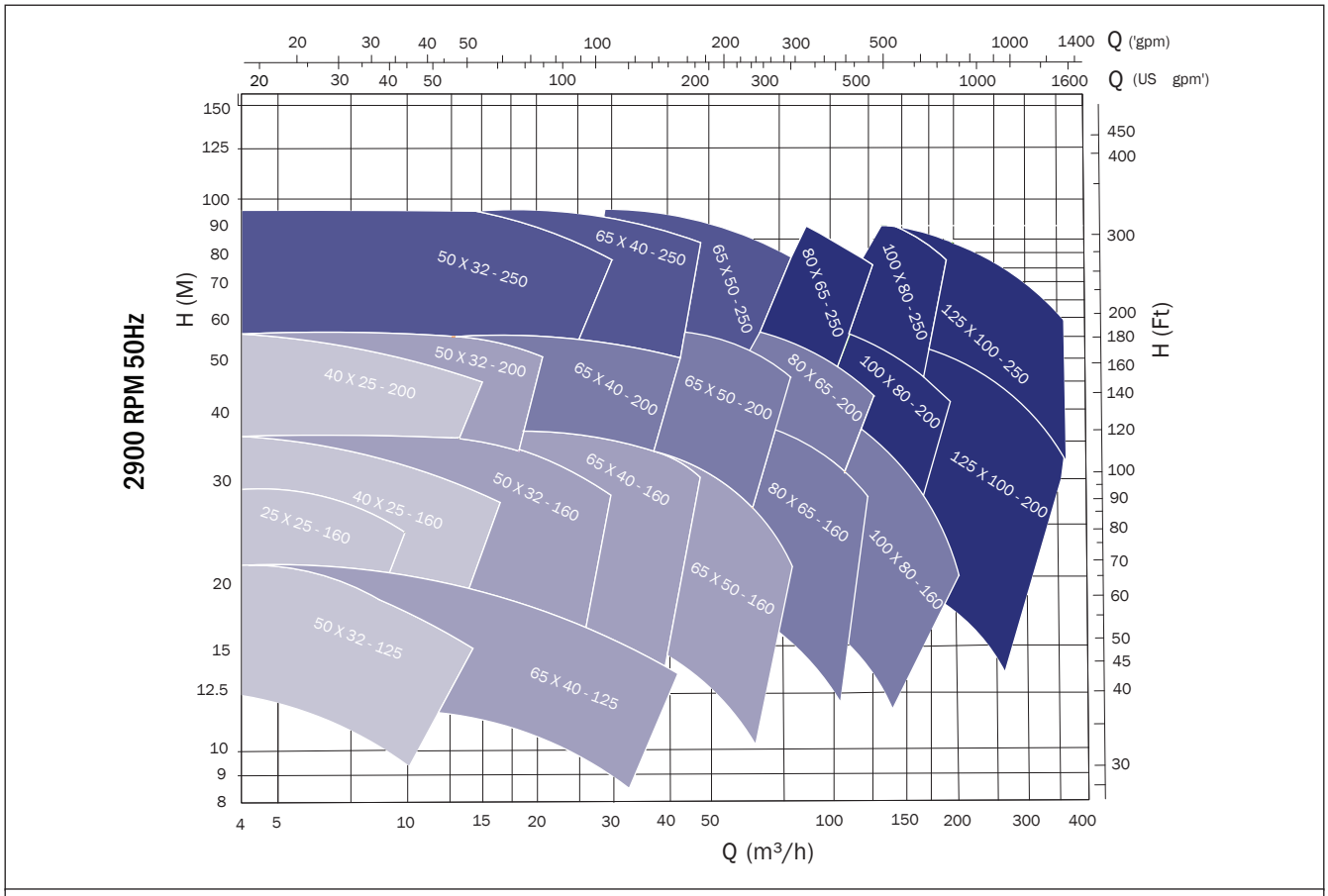

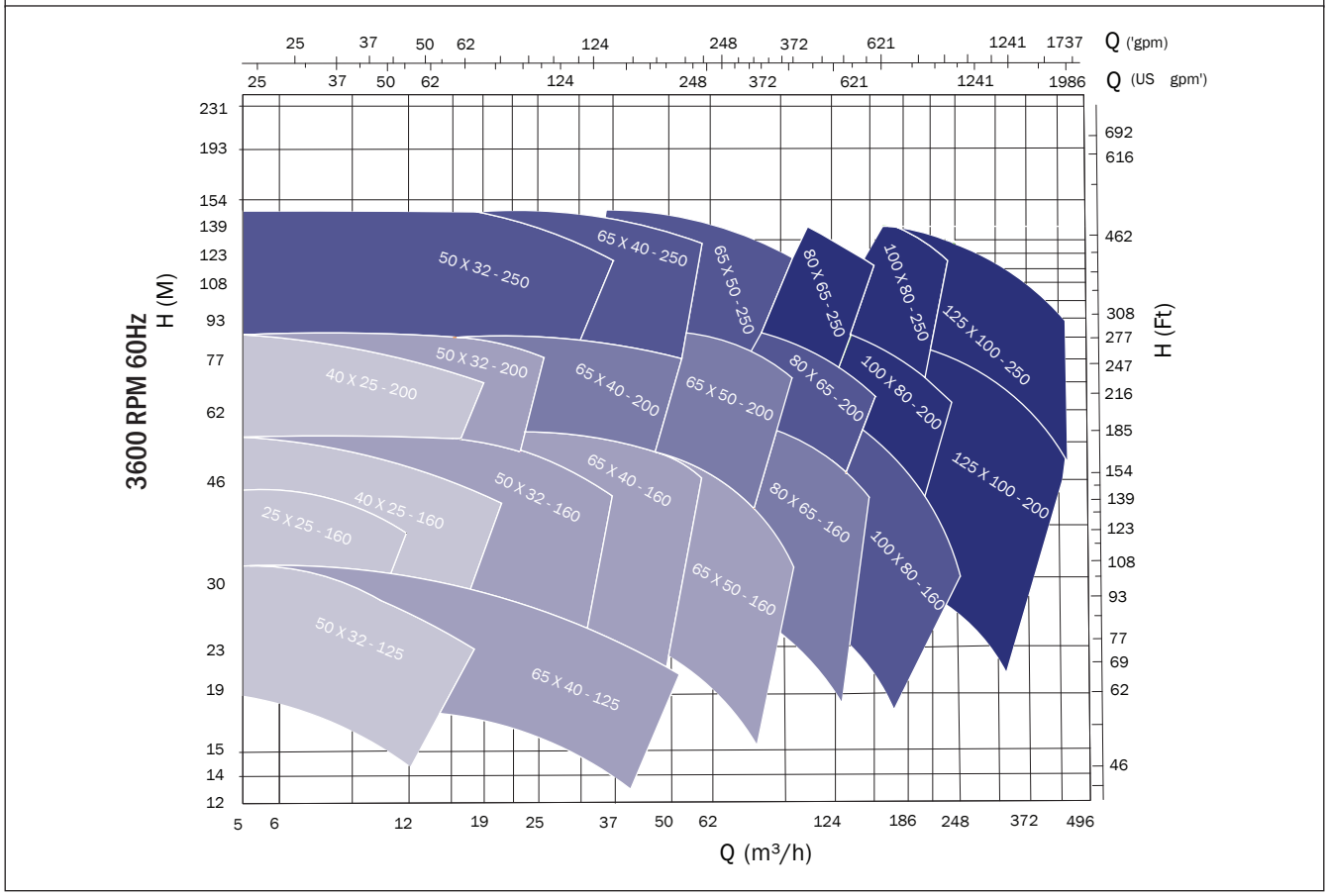

REARING BRACKETS :	T9A	T9	T10	T10A	T11

ACCTF – WATER COOLED THERMIC FLUID PUMPS

ACCTF Water-cooled thermic fluid pumps are designed to handle applications that ACTF Air-cooled pumps cannot. The water-cooled assembly allows these pumps to operate at temperatures beyond the range of air-cooled pumps.

TECHNICAL DETAILS

CAPACITY	*upto 750 m^3/hour*
HEAD	*upto 150 m*
PRESSURE	*upto 16 bar*
SIZE	*25 TO 250 mm*
TEMPERATURE RANGE	*upto 420°C for thermic fluids and 180°C for hot water*
OPERATING FREQUENCY	*50Hz and 60Hz*
MATERIAL OF CONSTRUCTION	*WCB, WC6, WC9, CF8, CF8M*
BACK PULL - OUT DESIGN FOR EASY MAINTENANCE AND OPERATION	
SHAFT SEALING OPTIONS	*High temperture gland packing, single acting mechanical seal with internal flusing and double acting mechanical seal with external flusing.*
JACKETED BEARING HOUSING AND STUFFING BOX DESIGN TO PROVIDE COOLING WATER CIRCULATION TO THE BEARING AND SEAL CHAMBER	

ACCTF FAMILY CURVES

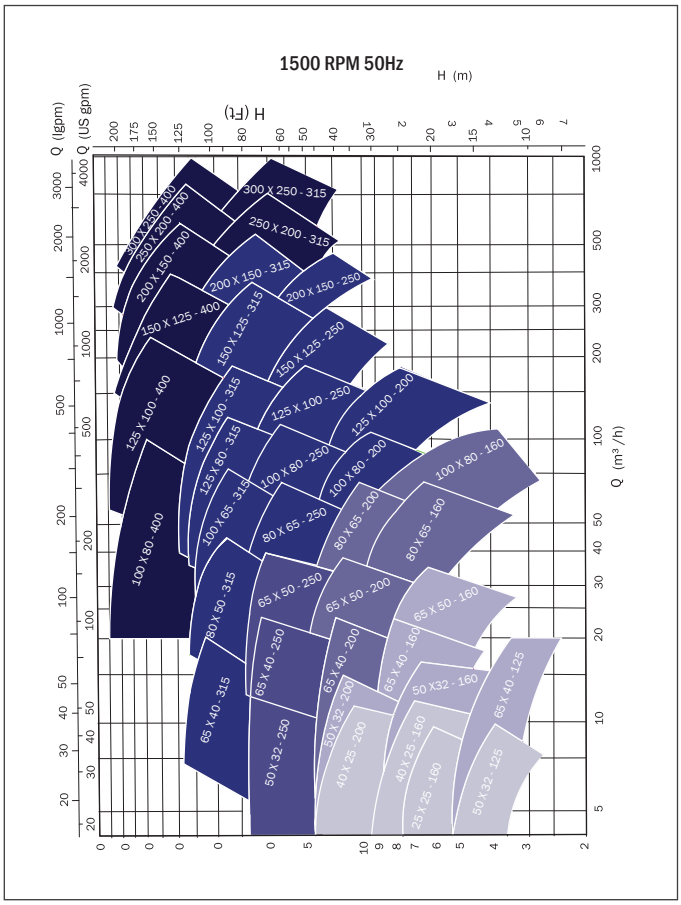

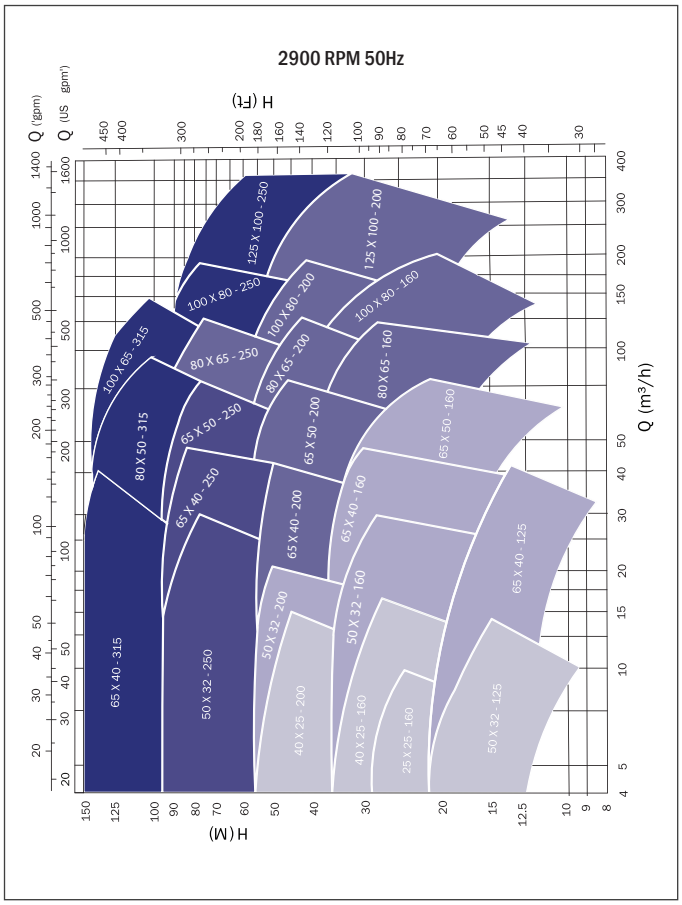

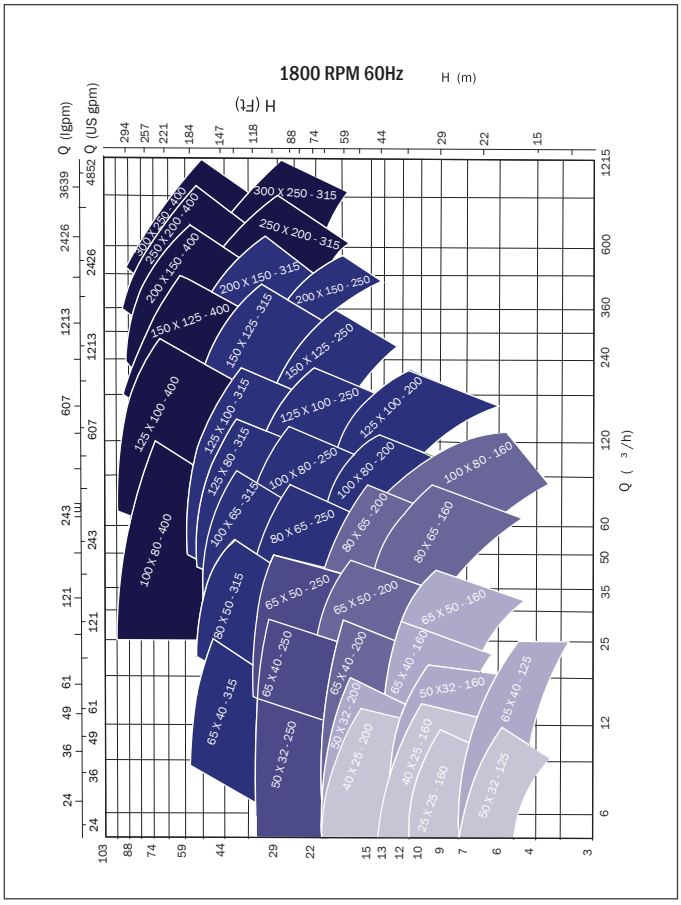

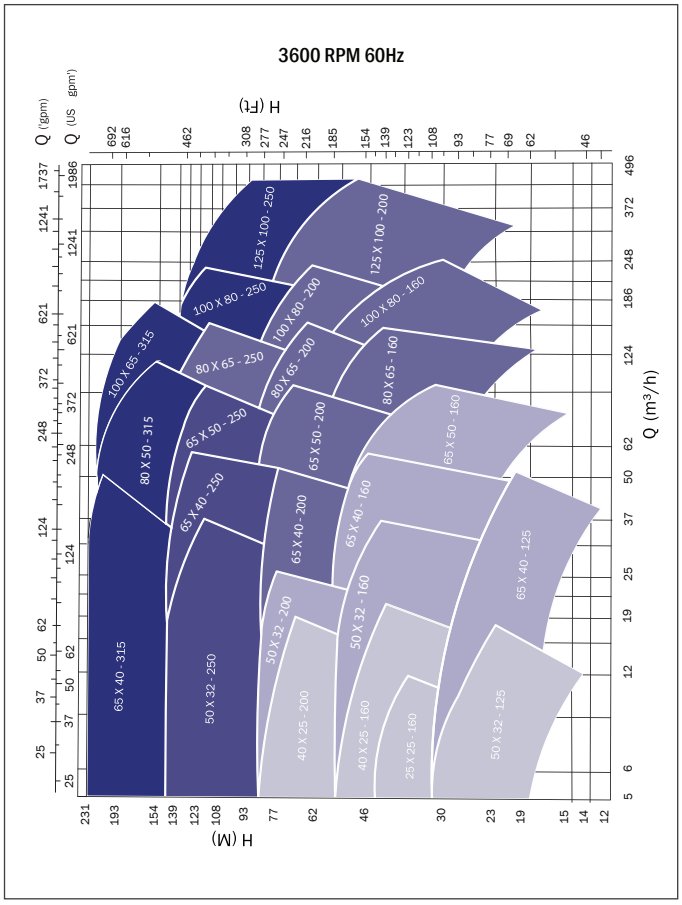

BEARING BRACKETS :	T9A	T9	T10	T10A	T11	T13

AURO

WORKS: 104/5/6, G.I.D.C., Palej - 32220. Dist. Bharuch, Gujarat, India
OFFICE: 309 Nilamber Primero, Vasna - Bhayli road, Vadodara, Gujarat, India – 391410

: +91 92272-27768 | +91 88669-27768 | +91 97279-55542
: sales@auropumps.com : www.auropumps.com

ISO 9001:2015